MORGAN WINDOW & GLASS, INC.

SERIES M3100I AND M3100N FIXED WINDOWS

LARGE MISSILE IMPACT RESISTANT AND NON-IMPACT RESISTANT WINDOWS

NON-HVHZ

NON-SITE-SPECIFIC STRUCTURAL PERFORMANCE EVALUATION. A DESIGN PROFESSIONAL SHALL BE RESPONSIBLE FOR CERTIFYING THE APPLICATION OF THIS INFORMATION TO ANY SITE-SPECIFIC LOCATION.

FRANK BENNARDO, P.E.
PE# 0046549 CA# 9885

FRANK L. BENNARDO LICENSE No 0046549 STATE OF FLORIDA PROFESSIONAL ENGINEER SIGNED: &[Date]

Digitally signed by Frank Bennardo
Date: 2023.10.19 17:13:10 -04'00'

MAXIMUM ALLOWABLE DESIGN PRESSURES (A.S.D.):

+ 60 PSF
- 60 PSF

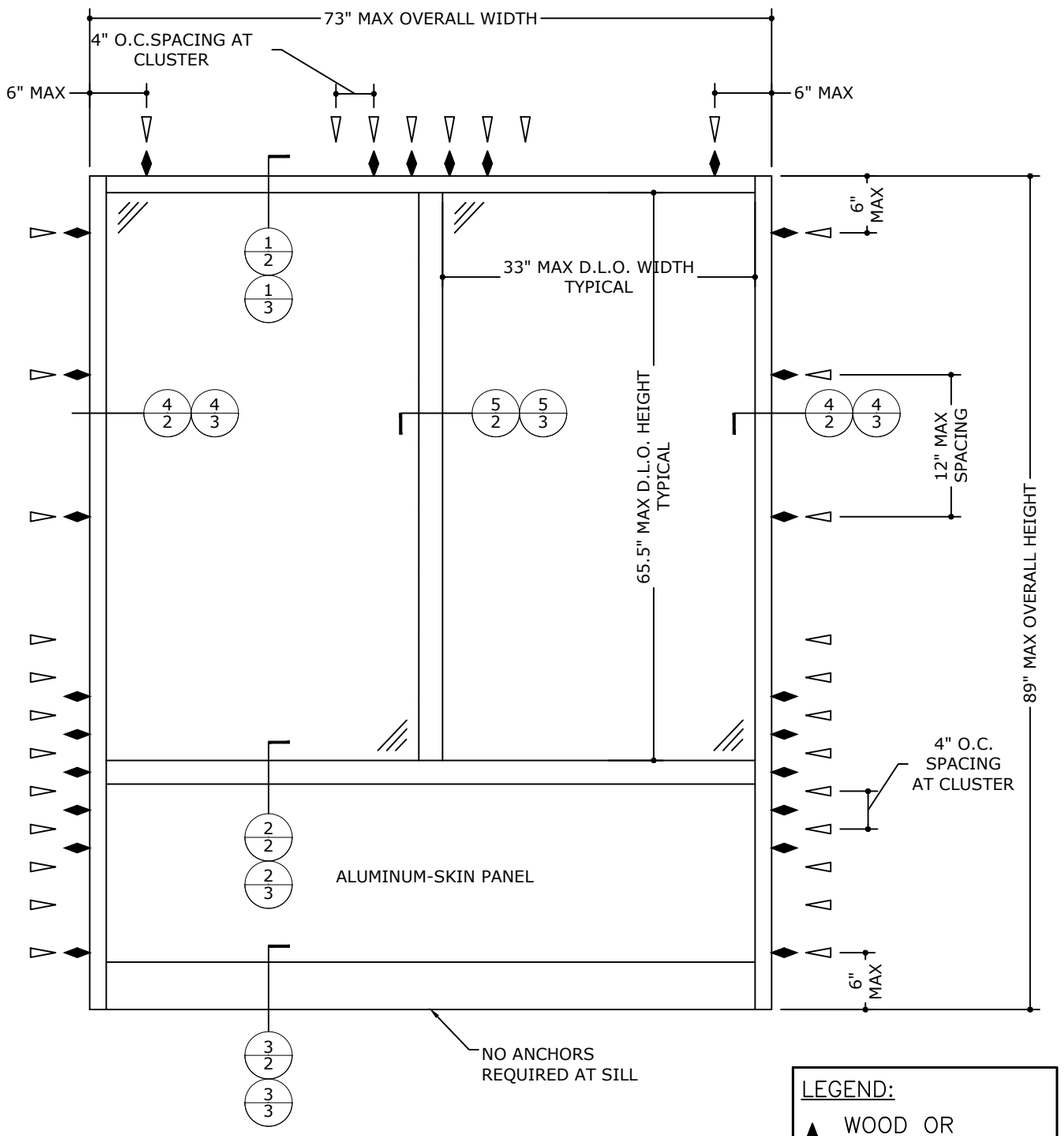

1/1 TYPICAL ELEVATION
N.T.S. ELEV VIEW

LEGEND:
- WOOD OR CONC ANCHORS
- MASONRY ANCHORS

GENERAL NOTES

1. THE SYSTEM DESCRIBED HEREIN HAS BEEN DESIGNED AND TESTED IN ACCORDANCE WITH THE FLORIDA BUILDING CODE EIGHTH EDITION (2023) FOR USE OUTSIDE THE HIGH VELOCITY HURRICANE ZONE, PER AAMA/NWWDA 101/I.S.2-97 & ASTM E1886/E1996.
2. NO 33-1/3% INCREASE IN ALLOWABLE STRESS HAS BEEN USED IN THE DESIGN OF THIS SYSTEM. WIND LOAD DURATION FACTOR C_D=1.6 HAS BEEN USED FOR WOOD ANCHOR DESIGN.
3. POSITIVE AND NEGATIVE DESIGN PRESSURES CALCULATED FOR USE WITH THIS SYSTEM SHALL BE DETERMINED BY OTHERS ON A JOB-SPECIFIC BASIS IN ACCORDANCE WITH THE GOVERNING CODE.
4. THE SYSTEM DETAILED HEREIN IS GENERIC AND DOES NOT PROVIDE INFORMATION FOR A SPECIFIC SITE. FOR SITE CONDITIONS DIFFERENT FROM THE CONDITIONS DETAILED HEREIN, A LICENSED ENGINEER OR REGISTERED ARCHITECT SHALL PREPARE SITE SPECIFIC DOCUMENTS FOR USE IN CONJUNCTION WITH THIS DOCUMENT.
5. PERMIT HOLDER SHALL VERIFY THE ADEQUACY OF THE EXISTING STRUCTURE TO WITHSTAND SUPERIMPOSED LOADS. WOOD BUCKS (BY OTHERS) SHALL BE ANCHORED PROPERLY TO TRANSFER LOADS TO THE EXISTING STRUCTURE.
6. ALL EXTRUSIONS SHALL BE 6063-T5 ALUMINUM ALLOY, UNLESS NOTED OTHERWISE.
7. ENSURE MINIMUM 2-1/2" EDGE DISTANCE FOR ALL ANCHORS TO CONCRETE & TO GROUT-FILLED BLOCK.
8. WHERE ANCHORS FASTEN TO NARROW FACE OF STUD FRAMING, ANCHOR SHALL BE LOCATED IN CENTER OF NOMINAL 2x (MIN) WOOD STUD (i.e. 3/4" EDGE DISTANCE IS ACCEPTABLE FOR ANCHORS TO WOOD FRAMING).
9. EMBEDMENT SHALL BE AS NOTED IN ANCHOR SCHEDULE. EMBEDMENT AND EDGE DISTANCE EXCLUDES STUCCO, FOAM, BRICK, AND OTHER WALL FINISHES.
10. UNITS GLAZED WITH 1" OVERALL INSULATED GLASS (1/4" ANNEALED + 1/2" GAP + 1/4" ANNEALED) ARE NOT IMPACT RESISTANT AND REQUIRE PROTECTION FROM WIND-BORNE DEBRIS WHERE APPLICABLE.
11. UNITS GLAZED WITH 1.020" LAMINATED GLASS (1/8" HEAT STRENGTHENED + 1/10" PVB + 1/8" HEAT STRENGTHENED+ 1/2" GAP + 3/16" ANNEALED) ARE LARGE MISSILE IMPACT RESISTANT AND DO NOT REQUIRE IMPACT RESISTANT SHUTTERS.
12. EXTERIOR SEAM OF FRAME CORNERS SHALL BE SEALED WITH SILICONE.
13. ALL CONCRETE/BLOCK ANCHORS SHALL BE PER MANUFACTURER'S SPECIFICATIONS U.N.O. ALL SCREWS & WASHERS SHALL BE ZINC COATED STEEL, GALVANIZED STEEL, OR STAINLESS STEEL WITH A MINIMUM TENSILE YIELD STRENGTH OF 60 KSI. ALL 3/16"Ø OR 1/4"Ø POP RIVETS SHALL BE 5056-H32 ALUMINUM ALLOY OR STRONGER.
14. ALL STEEL IN CONTACT WITH ALUMINUM SHALL BE PAINTED OR PLATED.

ANCHOR SCHEDULE:

TO GROUT-FILLED BLOCK OR CONCRETE:

- 1/4" DEWALT ULTRACON THRU WOOD 1X BUCKS OR DIRECTLY INTO UNCRACKED CONCRETE (f'c=2846 PSI MIN.) OR GROUT FILLED CELL (ASTM C90) WITH 1-3/4" EMBED.
- 1/4" ITW TAPCON (STAINLESS STEEL) THRU WOOD 1X BUCKS OR DIRECTLY INTO UNCRACKED CONCRETE (f'c=3192 PSI MIN.) WITH 1-3/4" EMBED. OR GROUT FILLED CELL (ASTM C90) WITH 1-1/4" EMBED.

TO WOOD BUCK OR WOOD HOST STRUCTURE:

- 1/4" DEWALT ULTRACON OR ITW TAPCON (STAINLESS STEEL) WITH 1-1/2" THREAD PENETRATION INTO WOOD (G=0.55 MIN.)
- #12 WOOD SCREWS W/ 1-1/2" THREAD PENETRATION INTO WOOD (G=0.55 MIN.)

NOTE REGARDING USE OF THIS DOCUMENT & USE OUTSIDE FLORIDA:

NON-SITE-SPECIFIC STRUCTURAL PERFORMANCE EVALUATION. THIS PRODUCT EVALUATION IS VALID FOR USE IN **FLORIDA ONLY**. USE OF THIS EVALUATION REQUIRES A REVIEW & CERTIFICATION BY A LOCAL DESIGN PROFESSIONAL WHO SHALL BE RESPONSIBLE FOR THE PROPER ADAPTATION OF THIS GENERAL PERFORMANCE EVALUATION TO ANY SITE-SPECIFIC PROJECT. CONTACT THIS OFFICE AT **ENGINEERINGEXPRESS.COM/QUOTE** FOR ASSISTANCE WITH YOUR PROJECT-SPECIFIC NEEDS & FOR ADAPTATION & CERTIFICATION OF THIS DOCUMENT OUTSIDE OF FLORIDA.

VISIT ECALC.IO/68116a

FOR SITE-SPECIFIC DEVIATIONS & MORE INFORMATION ABOUT THIS DOCUMENT OR SCAN THIS QR CODE

VISIT ENGINEERINGEXPRESS.COM/STORE FOR ADDITIONAL PLANS, REPORTS & RESOURCES

FL# 8649.1

ENGINEERING EXPRESS®
POSTAL ADDRESS:
2234 NORTH FEDERAL HWY #7664
BOCA RATON, FL 33431
ENGINEERINGEXPRESS.COM

MORGAN WINDOW & GLASS, INC.
207 INDUSTRIAL BLVD
MCRAE, GA
31055

M3100I FIXED WINDOW (LMI) AND M3100N FIXED WINDOW (NON-IMPACT) - FBC (2023) FLORIDA STATEWIDE APPROVAL (FSA FL#8649.1)

REMARKS	DRWN	CHKD	DATE
2007 FBC	RKB	CL	02/02/09
UPDATED CERTIFICATES	KL	FLB	03/29/11
REV 2014 FBC (07-MW-0001)	ZAR	CSL	03/29/11
REV 2017 FBC	LAO	FLB	08/11/17
REV 2020 FBC	JEM	AJP	10/13/20
REV 2023 FBC (PREV 20-30902)	AMZ	RS	10/17/23

COPYRIGHT ENGINEERING EXPRESS®

23-68116a

SCALE: NTS UNLESS NOTED

01 OF 04

10/17/2023 3:42 PM ARIEL c:\users\ariel\engineering express\production - documentos\projects\23-\23-68116 multiple products 2023 fbc update fl8649\work\drawings & cad\23-68116a -fl8649.1 - dwg_1.dwg

SERIES M3100I

LARGE MISSILE IMPACT RESISTANT

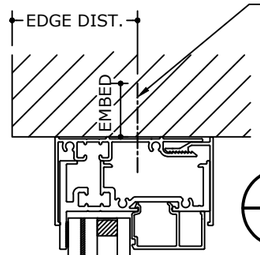

ANCHORS PER ANCHOR SCHED, SPACED PER TYPICAL ELEVATION

1/2 TYPICAL HEAD DETAIL

N.T.S. VERT SECTION

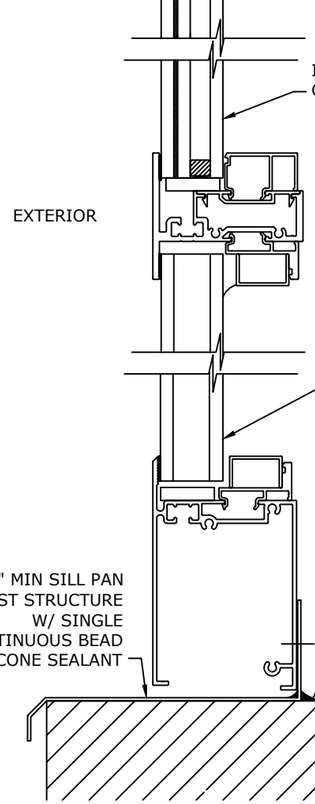

2/2 TYPICAL HORIZONTAL INTERMEDIATE DETAIL

N.T.S. VERT SECTION

3/2 TYPICAL SILL DETAIL

N.T.S. VERT SECTION

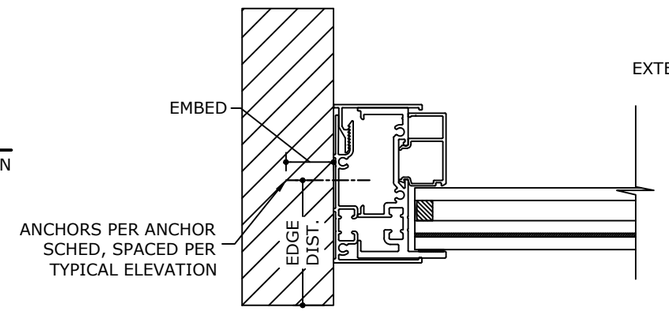

4/2 JAMB DETAIL (TYP. BOTH SIDES)

N.T.S. HORIZ SECTION

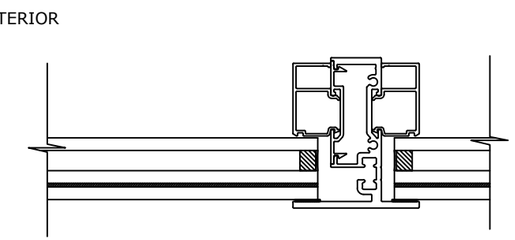

5/2 TYPICAL VERTICAL INTERMEDIATE DETAIL

N.T.S. HORIZ SECTION

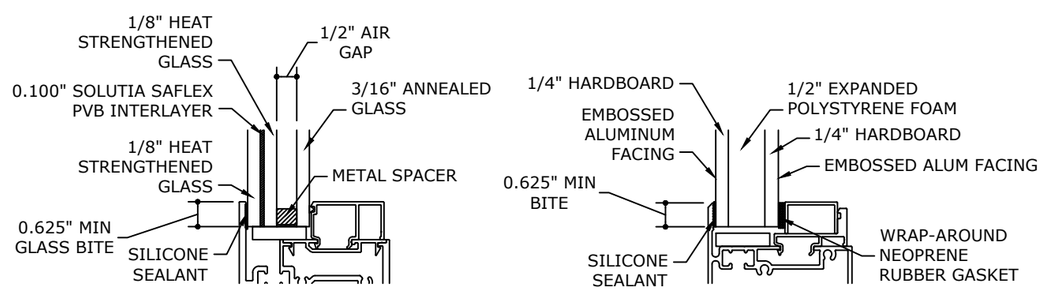

6/2 GLAZING DETAILS

N.T.S. VERT SECTION

FRANK BENNARDO, P.E.
PE# 0046549 CA# 9885

FRANK L. BENNARDO LICENSE No 0046549 STATE OF FLORIDA PROFESSIONAL ENGINEER

OCTOBER 17, 2023

FL# 8649.1

ENGINEERING EXPRESS®
POSTAL ADDRESS:
2234 NORTH FEDERAL HWY #7664
BOCA RATON, FL 33431
ENGINEERINGEXPRESS.COM

MORGAN WINDOW & GLASS, INC.
207 INDUSTRIAL BLVD
MCRAE, GA
31055

M3100I FIXED WINDOW (LMI) AND M3100N FIXED WINDOW (NON-IMPACT) - FBC (2023) FLORIDA STATEWIDE APPROVAL (FSA FL#8649.1)

REMARKS	DRWN	CHKD	DATE
2007 FBC	RKB	CL	02/02/09
UPDATED CERTIFICATES	KL	FLB	03/29/11
REV 2014 FBC (07-MW-0001)	ZAR	CSL	03/29/11
REV 2017 FBC	LAO	FLB	08/11/17
REV 2020 FBC	JEM	AJP	10/13/20
REV 20/23 FBC (PREV 20-30902)	AMZ	RS	10/17/23

COPYRIGHT ENGINEERING EXPRESS®

23-68116a

SCALE: NTS UNLESS NOTED

02 OF 04

10/17/2023 3:42 PM ARIEL c:\users\ariel\engineering express\production - documentos\projects\23-\23-68116 multiple products 2023 fbc update fl8649\work\drawings & cad\23-68116a -fl8649.1 - dwg_1.dwg

SERIES M3100N

NON-IMPACT RESISTANT

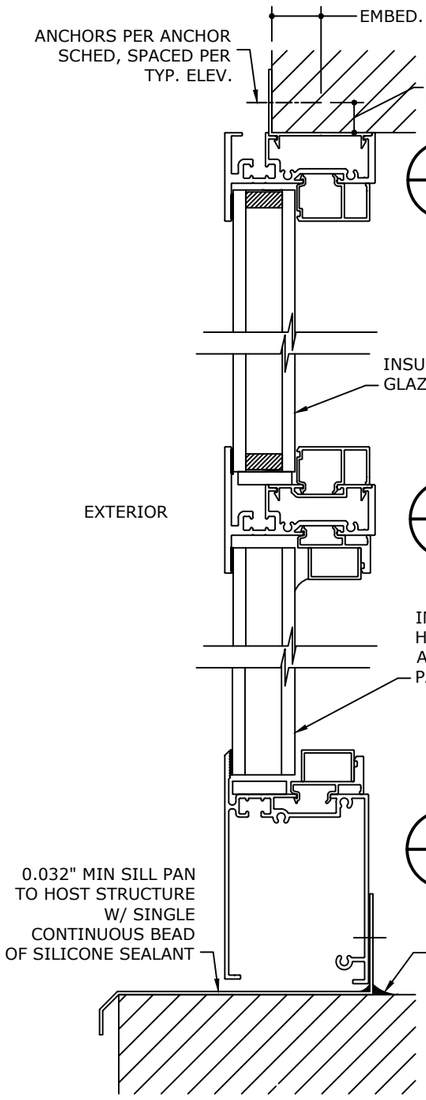

1/3 TYPICAL HEAD DETAIL
N.T.S. VERT SECTION

2/3 TYPICAL HORIZONTAL INTERMEDIATE DETAIL
N.T.S. VERT SECTION

3/3 TYPICAL SILL DETAIL
N.T.S. VERT SECTION

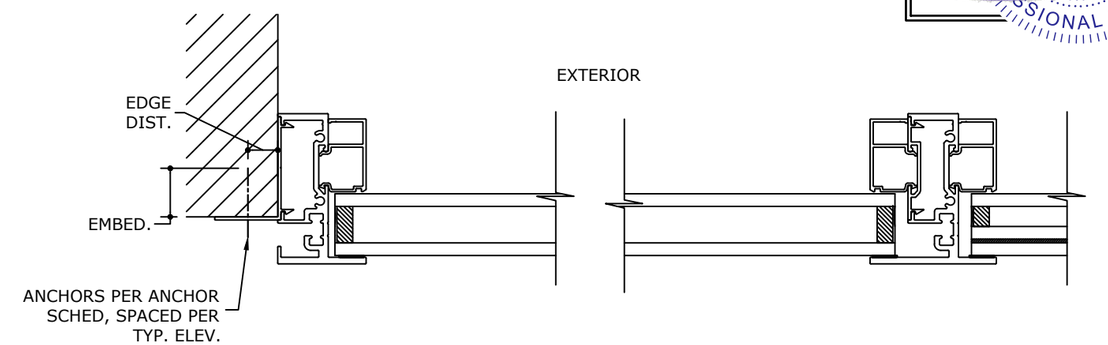

4/3 JAMB DETAIL (TYP. BOTH SIDES)
N.T.S. HORIZ SECTION

5/3 TYPICAL VERTICAL INTERMEDIATE DETAIL
N.T.S. HORIZ SECTION

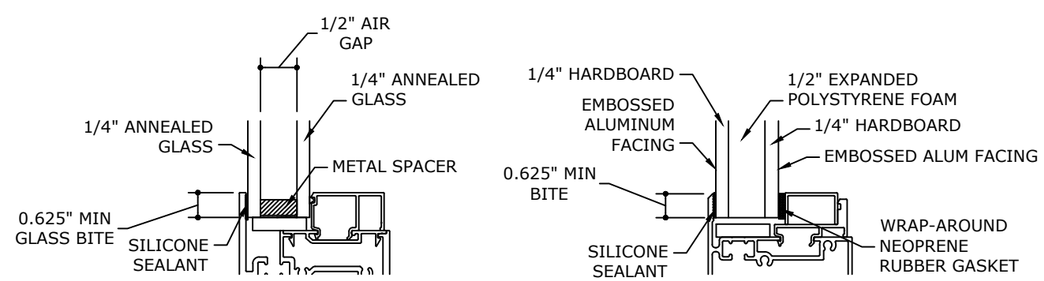

6/3 GLAZING DETAILS
N.T.S. VERT SECTION

FRANK BENNARDO, P.E.
PE# 0046549 CA# 9885

FRANK L. BENNARDO LICENSE No 0046549 STATE OF FLORIDA PROFESSIONAL ENGINEER

OCTOBER 17, 2023

FL# 8649.1

ENGINEERING EXPRESS®
POSTAL ADDRESS:
2234 NORTH FEDERAL HWY #7664
BOCA RATON, FL 33431
ENGINEERINGEXPRESS.COM

MORGAN WINDOW & GLASS, INC.
207 INDUSTRIAL BLVD
MCRAE, GA
31055

M31001 FIXED WINDOW (LMI) AND M3100N FIXED WINDOW (NON-IMPACT) - FBC (2023) FLORIDA STATEWIDE APPROVAL (FSA FL#8649.1)

REMARKS	DRWN	CHKD	DATE
2007 FBC	RKB	CL	02/02/09
UPDATED CERTIFICATES	KL	FLB	03/29/11
REV 2014 FBC (07-MW-0001)	ZAR	CSL	03/29/11
REV 2017 FBC	LAO	FLB	08/11/17
REV 2020 FBC	JEM	AJP	10/13/20
REV 2023 FBC (PREV 20-30902)	AMZ	RS	10/17/23

COPYRIGHT ENGINEERING EXPRESS®

23-68116a

SCALE: NTS UNLESS NOTED

03 OF 04

10/17/2023 3:42 PM ARIEL c:\users\ariel\engineering express\production - documentos\projects\23-\23-68116 multiple products 2023 fbc update fl8649\work\drawings & cad\23-68116a -fl8649.1 - dwg_1.dwg

FRANK BENNARDO, P.E.
PE# 0046549 CA# 9885

FRANK L. BENNARDO
LICENSE
No 0046549
STATE OF FLORIDA
PROFESSIONAL ENGINEER

OCTOBER 17, 2023

FL# 8649.1

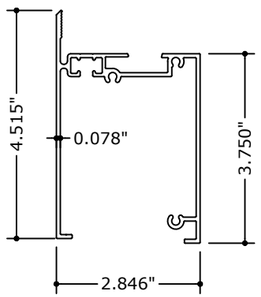

1 PANEL BASE
N.T.S. 6063-T5

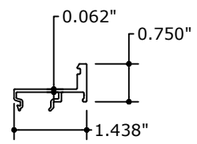

2 PANEL STOP
N.T.S. 6063-T5

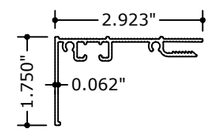

3 RECEPTOR
N.T.S. 6063-T5

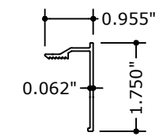

4 RECEPTOR
N.T.S. 6063-T5

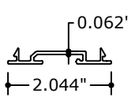

5 INTERMEDIATE SNAP PLATE
N.T.S. 6063-T5

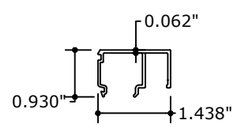

6 GLASS STOP
N.T.S. 6063-T5

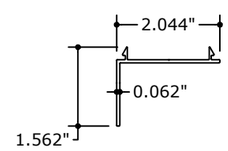

7 NAIL FIN
N.T.S. 6063-T5

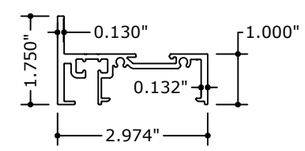

8 JAMB/HEAD/INTERMEDIATES
N.T.S. 6063-T5

ENGINEERING EXPRESS®
POSTAL ADDRESS:
2234 NORTH FEDERAL HWY #7664
BOCA RATON, FL 33431
ENGINEERINGEXPRESS.COM

MORGAN WINDOW & GLASS, INC.
207 INDUSTRIAL BLVD
MCRAE, GA
31055

M3100I FIXED WINDOW (LMI) AND M3100N
FIXED WINDOW (NON-IMPACT) - FBC (2023)
FLORIDA STATEWIDE APPROVAL (FSA FL#8649.1)

REMARKS	DRWN	CHKD	DATE
2007 FBC	RKB	CL	02/02/09
UPDATED CERTIFICATES	KL	FLB	03/29/11
REV 2014 FBC (07-MW-0001)	ZAR	CSL	03/29/11
REV 2017 FBC	LAO	FLB	08/11/17
REV 2020 FBC	JEM	AJP	10/13/20
REV 2023 FBC (PREV 20-30902)	AMZ	RS	10/17/23

COPYRIGHT ENGINEERING EXPRESS®

23-68116a

SCALE: NTS UNLESS NOTED

10/17/2023 3:42 PM ARIEL c:\users\ariel\engineering express\production - documentos\projects\23-\23-68116 multiple products 2023 fbc update fl8649\work\drawings & cad\23-68116a -fl8649.1 - dwg_1.dwg